Installation manual

ACO Access Covers Assist

UNIFACE GS/SS Assist
UNIFACE AL Assist
PAVING Assist
SOLID Assist

ENG **Installation Manual**

GER **Installationsanleitung**

FRA **Instructions d´installation**

ESP **Manual De Instalación**

POR **Manual de Instalação**

ITA **Manuale d'installazione**

NLD **Installatiehandleiding**

CZE **Instalační manuál**

RUS **Инструкция По Установке**

SWE **Installationsanvisning**

NOR **Instalasjons Manual**

FIN **Asennusohje**

DAN **Installationsvejledning**

EST **Paigaldusjuhend**

LAV **Uzstādīšanas instrukcija**

LIT **Montavimo instrukcija**

POL **Instrukcja montażu**

BUL **Инструкции за инсталация**

HUN **Beépítési útmutató**

RUM **Instructiuni de instalare**

HRV **Upute za ugradnju**

SLV **Navodila za vgradnjo**

SRP **Preporuka za ugradnju**

TUR **Montaj kılavuzu**

A

AAC UNIFACE GS/SS ASSIST

B

AAC UNIFACE AL ASSIST

C

AAC PAVING ASSIST

D

AAC SOLID ASSIST

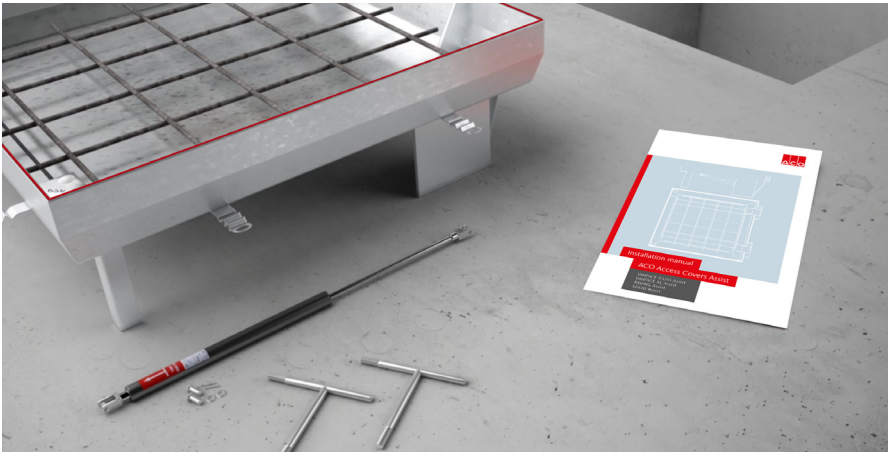

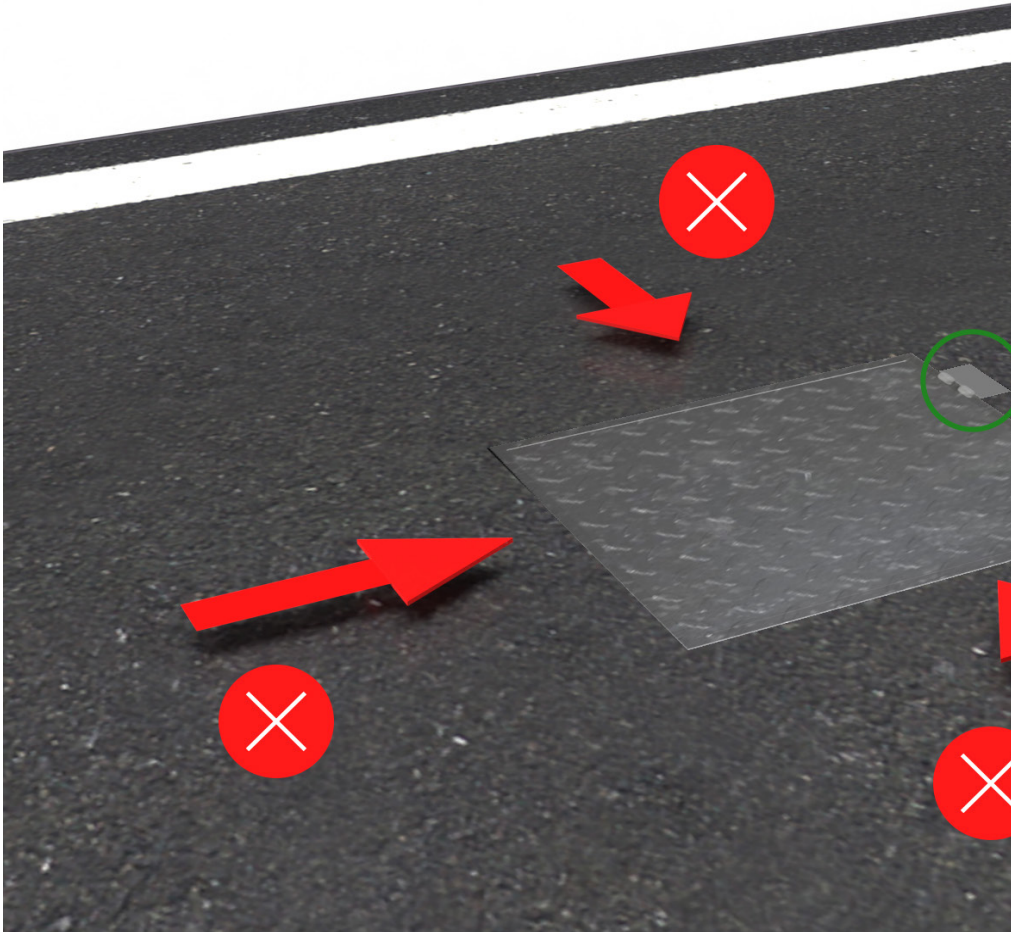

ACO Access Covers UNIFACE GS Assist

Order information

Clear opening (A x B)	External dimensions (C x D)	Frame height	Cover depth	Space for final floor	Load class (EN 1253)	Weight	Part No.
[mm]	[mm]	[mm]	[mm]	[mm]		[kg]	
400 x 400	575 x 542	89	70	15	N250	26,5	406537
500 x 500	675 x 642	89	70	15	M125	31,5	406538
600 x 600	775 x 742	89	70	15	M125	38	406539
600 x 800	775 x 942	89	70	15	M125	44,5	408713
800 x 800	975 x 942	89	70	15	L15	54,5	406540
800 x 1000	975 x 1142	89	70	15	L15	58,4	414951
1000 x 1000	1175 x 1142	89	70	15	L15	68	406541
500 x 500	675 x 642	89	110	15	N250	31,5	406542
600 x 600	775 x 742	89	110	15	N250	38	406543
800 x 800	975 x 942	89	110	15	M125	54	406544
750 x 750	927 x 892	89	70	15	L15	52	445754
450 x 450	627 x 592	89	70	15	M125	30,3	445684
450 x 600	627 x 742	89	70	15	M125	34,2	445686
600 x 750	777 x 892	89	70	15	M125	44	445688
600 x 900	777 x 1042	89	70	15	M125	48,3	445690
900 x 900	1077 x 1042	89	110	15	M125	61,6	445692
600 x 1000	777 x 1142	89	70	15	M125	54	445694

ACO Access Covers UNIFACE SS Assist

Order information

Clear opening (A x B)	External dimensions (C x D)	Frame height	Cover depth	Space for final floor	Load class (EN 1253)	Weight	Part No.
[mm]	[mm]	[mm]	[mm]	[mm]		[kg]	
400 x 400	575 x 542	89	70	15	N250	26,5	406529
500 x 500	675 x 642	89	70	15	M125	31,5	406530
600 x 600	775 x 742	89	70	15	M125	38	406531
600 x 800	775 x 942	89	70	15	M125	44,5	408712
800 x 800	975 x 942	89	70	15	L15	54,5	406532
800 x 1000	975 x 1142	89	70	15	L15	58,4	414950
1000 x 1000	1175 x 1142	89	70	15	L15	68	406533
500 x 500	675 x 642	89	110	15	N250	31,5	406534
600 x 600	775 x 742	89	110	15	N250	38	406535
800 x 800	975 x 942	89	110	15	M125	54	406536
750 x 750	927 x 892	89	70	15	L15	52	445755
450 x 450	627 x 592	89	70	15	M125	30,3	445685
450 x 600	627 x 742	89	70	15	M125	34,2	445687
600 x 750	777 x 892	89	70	15	M125	44	445689
600 x 900	777 x 1042	89	70	15	M125	48,3	445691
900 x 900	1077 x 1042	89	110	15	M125	61,6	445693
600 x 1000	777 x 1142	89	70	15	M125	54	445695

A

1

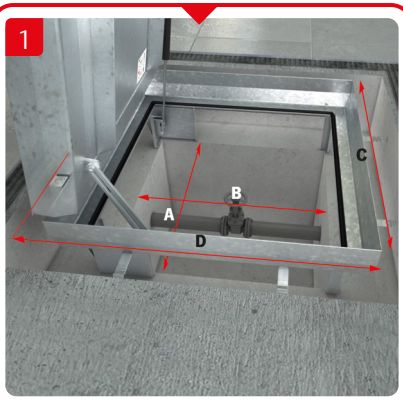

2

3

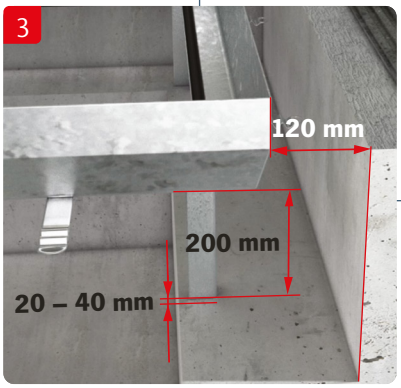

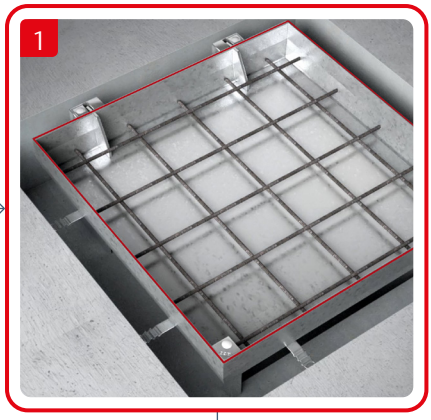
1

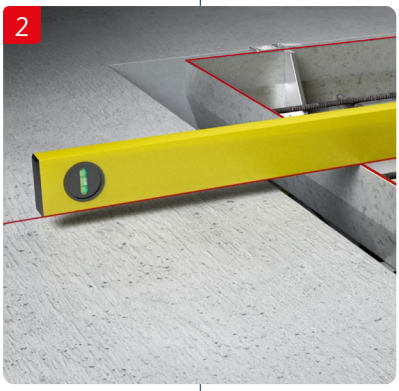
2

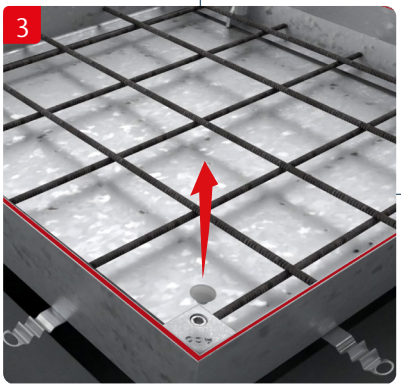
3

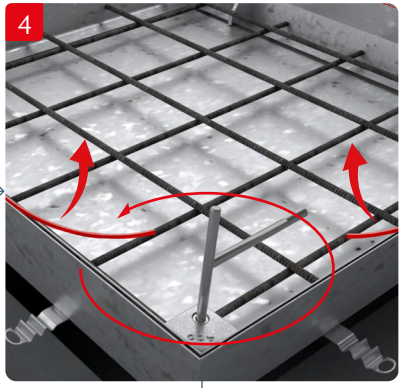
4

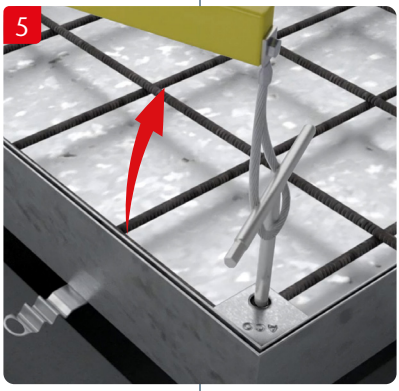
5

6

A

7

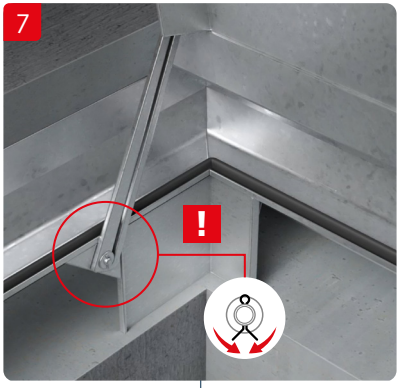

8

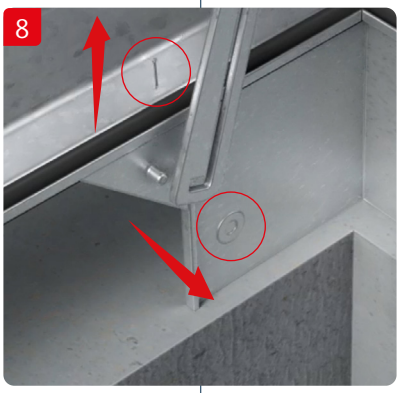

9

10

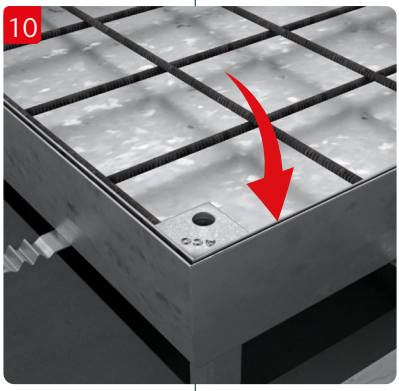

11

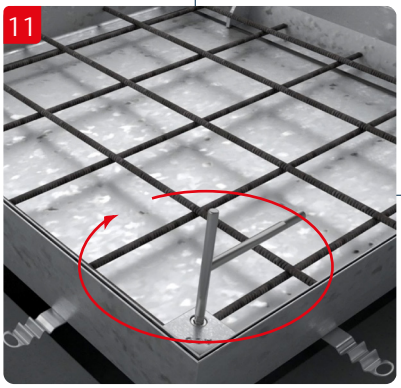

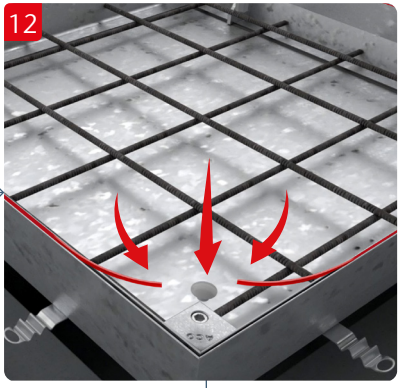
12

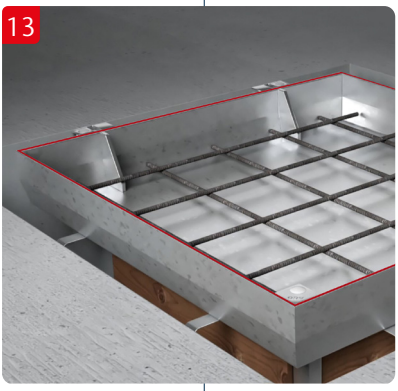
13

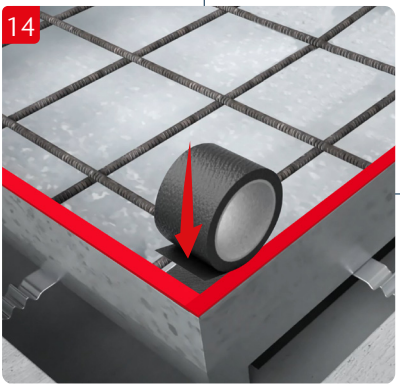
14

15
C35/45 (EN 206)

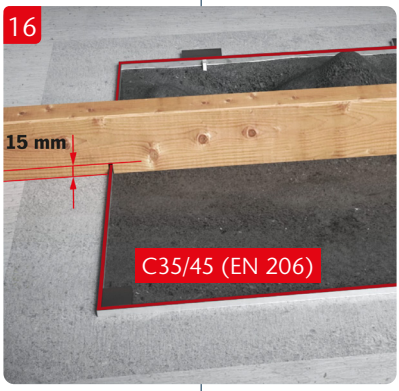
16
15 mm
C35/45 (EN 206)

17

A

18

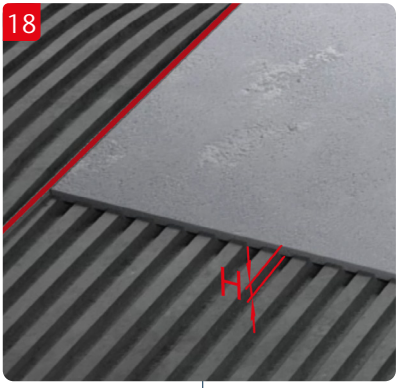

19

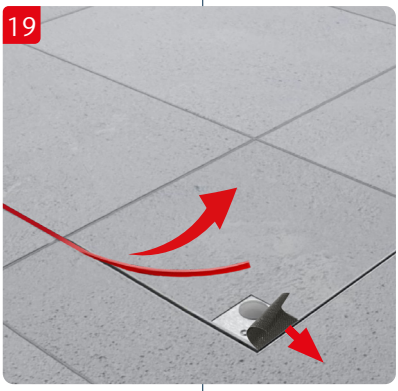

20

21

22

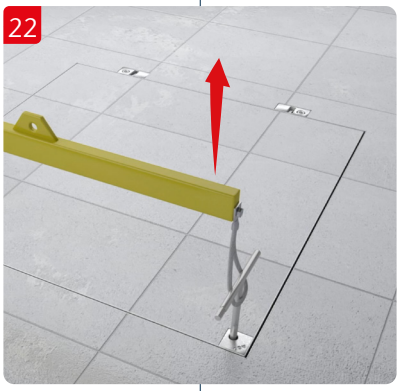

23

24
!

25

26
!

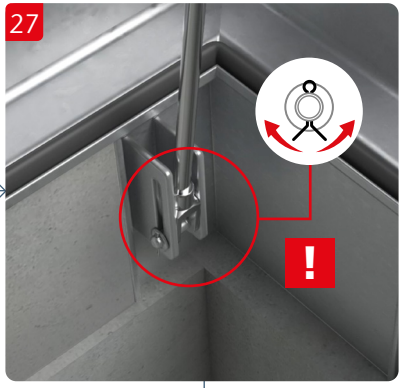
27
!

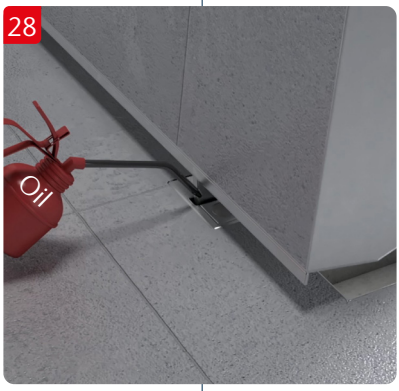
28
Oil

29

ACO Access Covers PAVING GS 80 Assist

Order information

Clear opening (A x B)	External dimensions (C x D)	Frame height	Cover depth	Load class (EN 124)	Weight	Part No.
[mm]	[mm]	[mm]	[mm]		[kg]	
400 x 400	536 x 570	104	80	A15	29,4	414504
500 x 500	636 x 670	104	80	A15	34,4	414505
600 x 600	736 x 770	104	80	A15	40,9	414506
700 x 700	836 x 870	104	80	A15	48,9	414507
800 x 800	936 x 970	104	80	A15	55,6	414508
900 x 900	1036 x 1070	104	80	A15	64,6	414509
1000 x 1000	1136 x 1170	104	80	A15	74,1	414510
400 x 400	536 x 570	104	80	B125	39,1	414512
500 x 500	636 x 670	104	80	B125	46	414513
600 x 600	736 x 770	104	80	B125	54,5	414514
700 x 700	836 x 870	104	80	B125	73,8	414515
800 x 800	936 x 970	104	80	B125	85,1	414516
900 x 900	1036 x 1070	104	80	B125	94	414517
1000 x 1000	1136 x 1170	104	80	B125	108	414518
400 x 400	536 x 570	104	80	C250	52,3	414520
500 x 500	636 x 670	104	80	C250	66,8	414521
600 x 600	736 x 770	104	80	C250	78,7	414522
700 x 700	836 x 870	104	80	C250	100,6	414523
800 x 800	936 x 970	104	80	C250	115,7	414524
900 x 900	1036 x 1070	104	80	C250	129,8	414525
1000 x 1000	1136 x 1170	104	80	C250	146,4	414526
400 x 400	536 x 570	104	80	D400	49,87	445624
500 x 500	636 x 670	104	80	D400	66,15	445625
600 x 600	736 x 770	104	80	D400	87,29	445626
700 x 700	836 x 870	104	80	D400	106,75	445627
800 x 800	936 x 970	104	80	D400	131,69	445628
900 x 900	1036 x 1070	104	80	D400	153,23	445629
1000 x 1000	1136 x 1170	104	80	D400	182,58	445630

ACO Access Covers PAVING GS 120 Assist

Order information

Clear opening (A x B)	External dimensions (C x D)	Frame height	Cover depth	Load class (EN 124)	Weight	Part No.
[mm]	[mm]	[mm]	[mm]		[kg]	
400 x 400	539 x 574	144	120	D400	56,27	445631
500 x 500	639 x 674	144	120	D400	76,13	445632
600 x 600	739 x 774	144	120	D400	97,68	445633
700 x 700	839 x 874	144	120	D400	119,85	445634
800 x 800	939 x 974	144	120	D400	144,23	445635
900 x 900	1039 x 1074	144	120	D400	169,61	445636
1000 x 1000	1139 x 1174	144	120	D400	195,85	445637

C

1

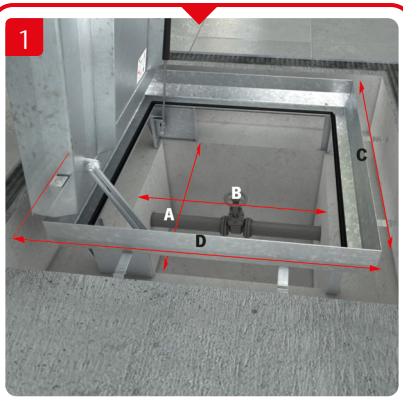

2

3

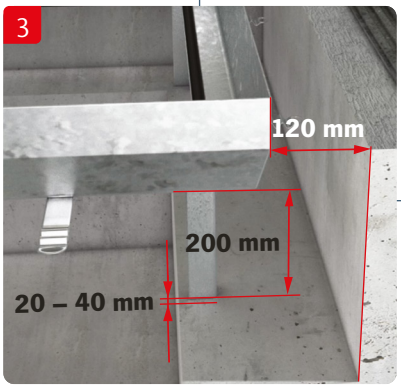

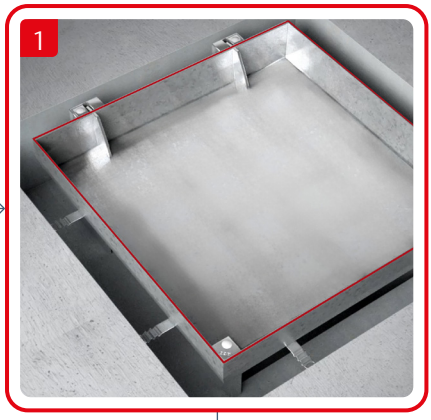
1

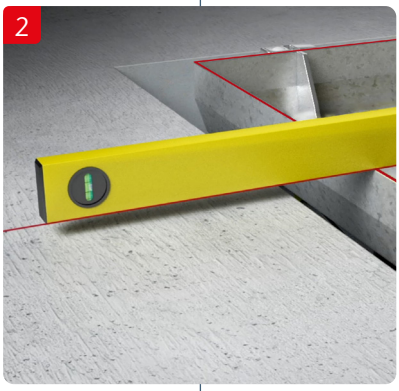
2

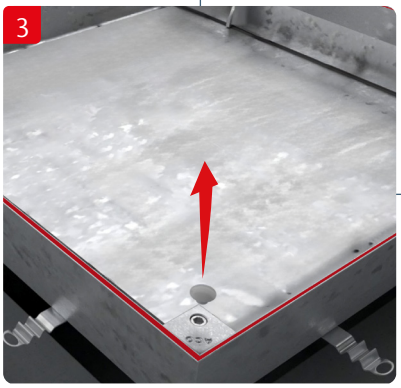
3

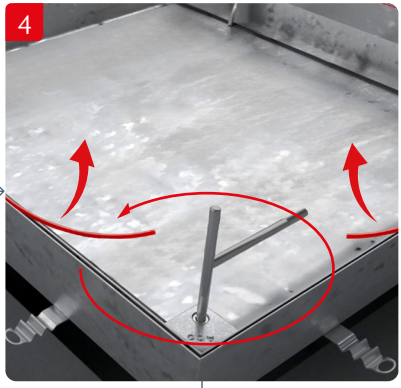
4

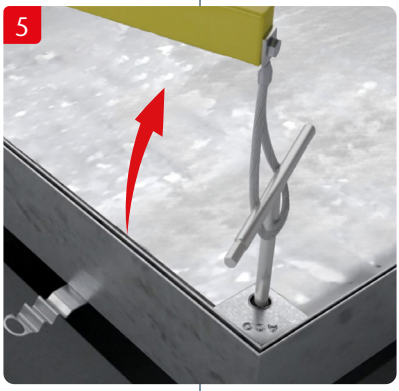
5

6

C

7

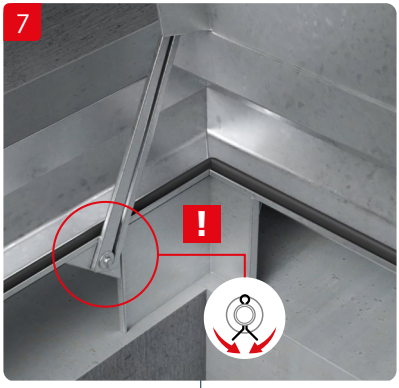

8

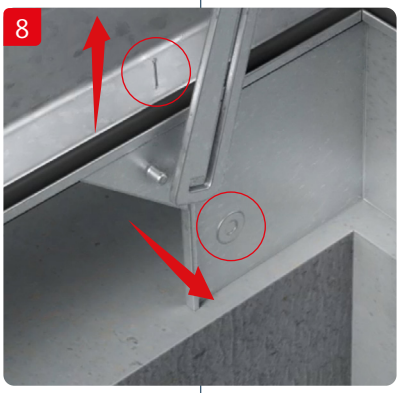

9

10

11

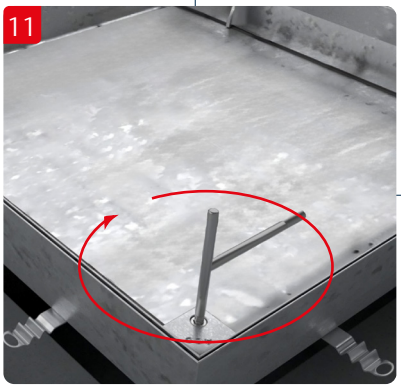

12

13

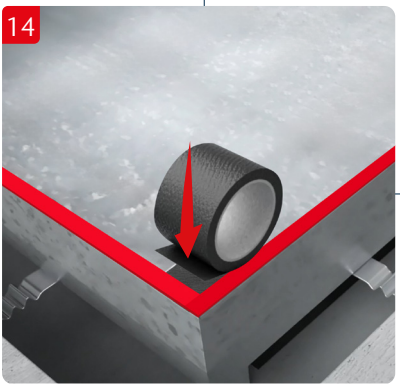
14

15
C35/45 (EN 206)

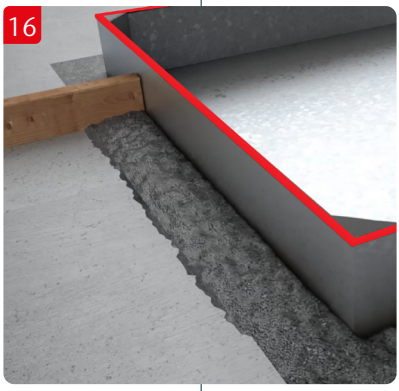
16

17
C35/45 (EN 206)

C

18

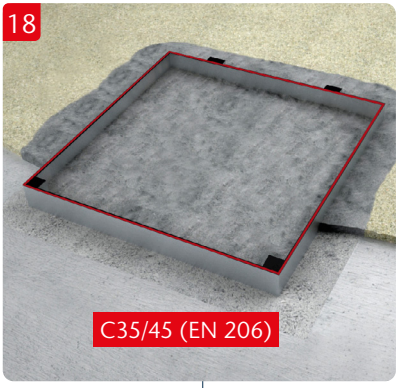

19

20

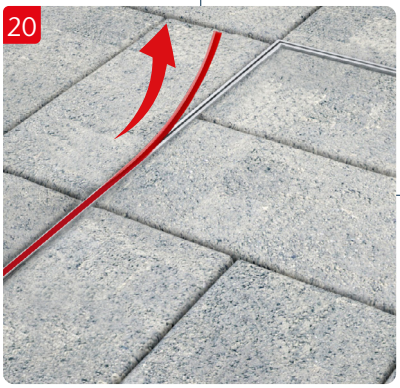

21

22

23

24
!
THIS SIDE UP

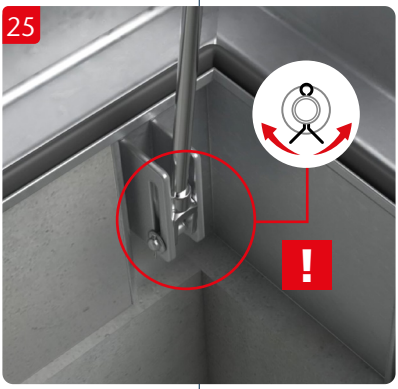
25
!

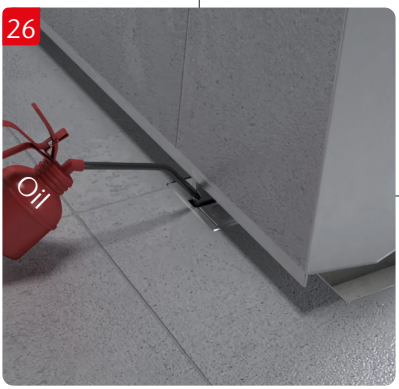
26
Oil

27

ACO Access Covers SOLID Assist GS

Order information

Clear opening (A x B)	External dimensions (C x D)	Frame height	Load class (EN 1253)	Weight	Part No.
[mm]	[mm]	[mm]		[kg]	
500 x 500	630 x 596	59,5	A15	25,5	415205
600 x 600	730 x 696	59,5	A15	31,7	415206
700 x 700	830 x 796	59,5	A15	44,5	415207
800 x 800	930 x 896	59,5	A15	49,4	415208
900 x 900	1030 x 996	59,5	A15	56,1	415209
1000 x 1000	1130 x 1096	59,5	A15	69	415210
500 x 500	630 x 596	59,5	B125	32,8	415211
600 x 600	730 x 696	59,5	B125	39,6	415212
700 x 700	830 x 796	59,5	B125	53,4	415213
800 x 800	930 x 896	59,5	B125	68,5	415214
900 x 900	1030 x 996	59,5	B125	76,6	415215
1000 x 1000	1130 x 1096	59,5	B125	90,6	415216
450 x 450	577 x 542	60	A15	23,5	445721
450 x 600	577 x 692	60	A15	27,2	445725
600 x 750	727 x 842	60	A15	37	445730
750 x 750	877 x 842	60	A15	43,5	445734
600 x 900	727 x 992	60	A15	41,6	445738
600 x 1000	727 x 1092	60	A15	47,3	445742
450 x 450	577 x 542	60	B125	31,3	445723
450 x 600	577 x 692	60	B125	36	445727
600 x 750	727 x 842	60	B125	53,7	445732
750 x 750	877 x 842	60	B125	65,5	445736
600 x 900	727 x 992	60	B125	59,7	445740
600 x 1000	727 x 1092	60	B125	66,1	445744

ACO Access Covers SOLID Assist SS

Order information

Clear opening (A x B)	External dimensions (C x D)	Frame height	Load class (EN 1253)	Weight	Part No.
[mm]	[mm]	[mm]		[kg]	
500 x 500	630 x 596	59,5	A15	25,5	415217
600 x 600	730 x 696	59,5	A15	31,7	415218
700 x 700	830 x 796	59,5	A15	44,5	415219
800 x 800	930 x 896	59,5	A15	49,4	415220
900 x 900	1030 x 996	59,5	A15	56,1	415221
1000 x 1000	1130 x 1096	59,5	A15	69	415222
500 x 500	630 x 596	59,5	B125	32,8	415223
600 x 600	730 x 696	59,5	B125	39,6	415224
700 x 700	830 x 796	59,5	B125	53,4	415225
800 x 800	930 x 896	59,5	B125	68,5	415226
900 x 900	1030 x 996	59,5	B125	76,6	415227
1000 x 1000	1130 x 1096	59,5	B125	90,6	415228
450 x 450	577 x 542	60	A15	23,5	445722
450 x 600	577 x 692	60	A15	27,2	445726
600 x 750	727 x 842	60	A15	37	445729
750 x 750	877 x 842	60	A15	43,5	445733
600 x 900	727 x 992	60	A15	41,6	445737
600 x 1000	727 x 1092	60	A15	47,3	445741
450 x 450	577 x 542	60	B125	31,3	445724
450 x 600	577 x 692	60	B125	36	445728
600 x 750	727 x 842	60	B125	53,7	445731
750 x 750	877 x 842	60	B125	65,5	445735
600 x 900	727 x 992	60	B125	59,7	445739
600 x 1000	727 x 1092	60	B125	66,1	445743

D

1

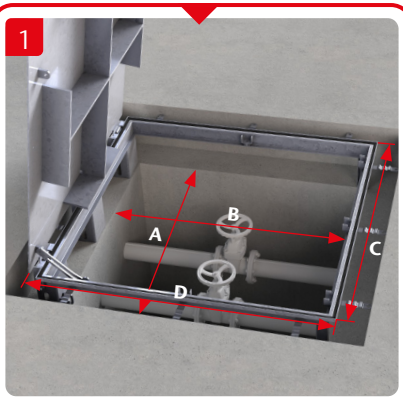

2

3

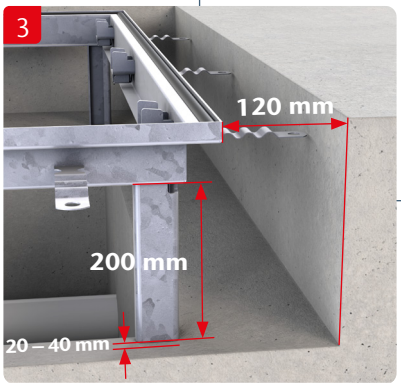

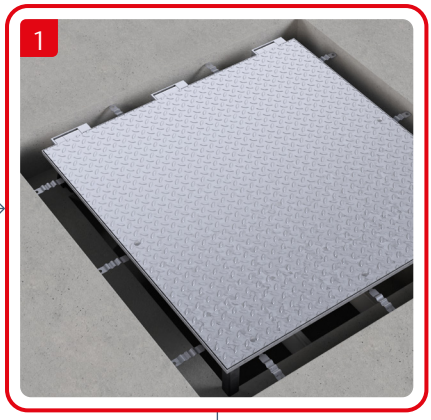
1

2

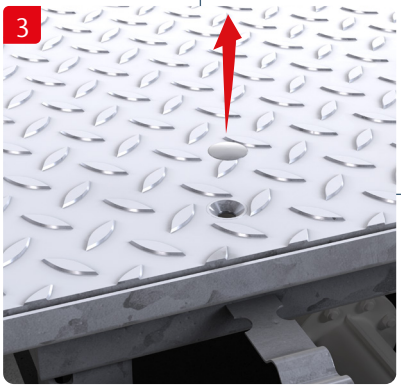
3

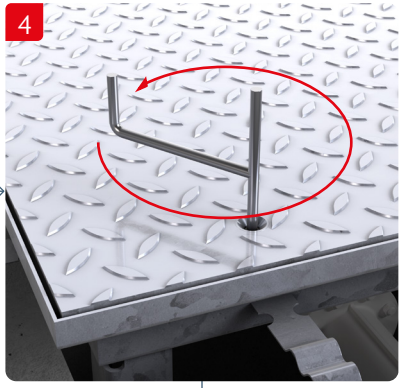
4

5

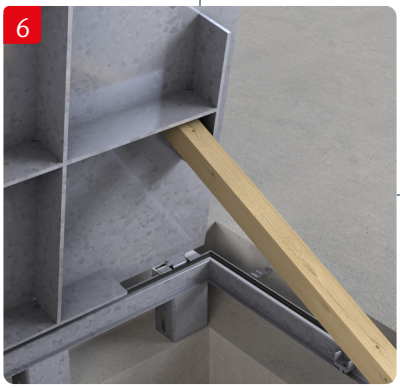
6

D

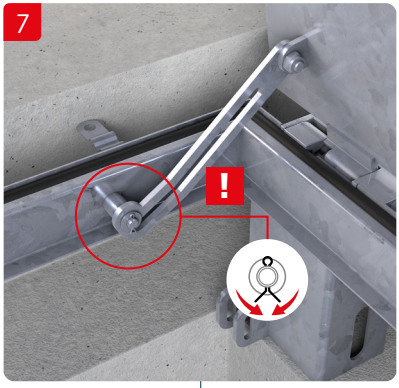

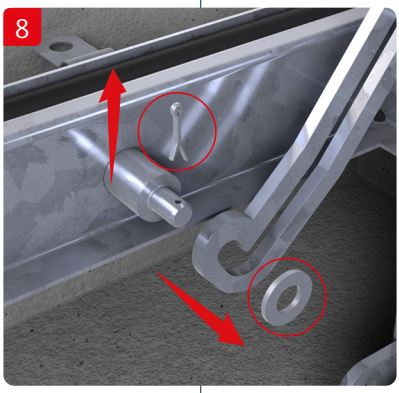

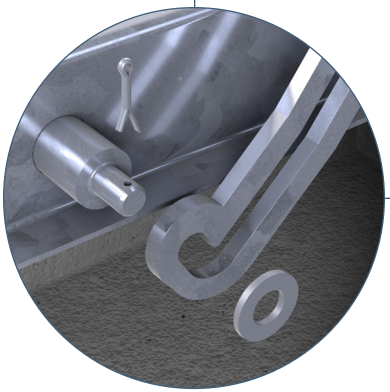

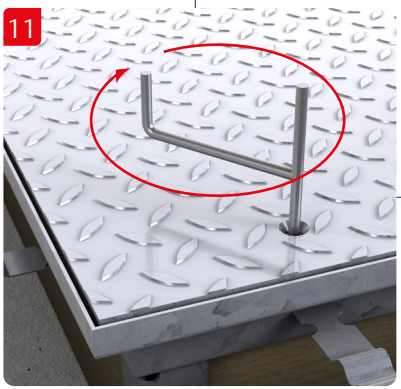

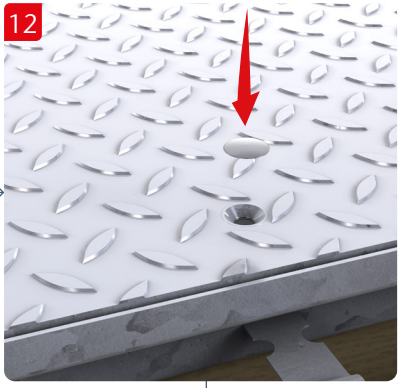
12

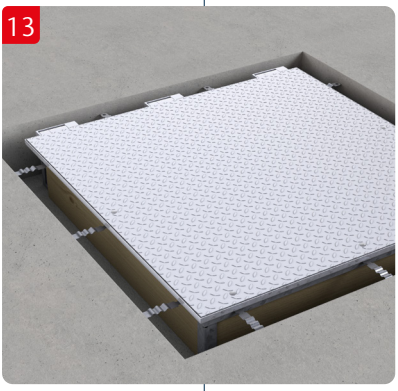
13

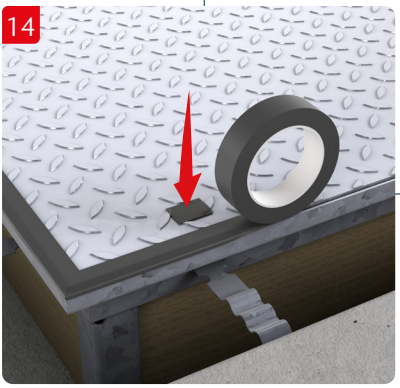
14

15
C35/45 (EN 206)

16

17
C35/45 (EN 206)

D

18

19

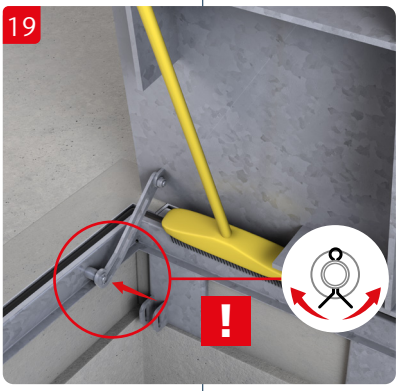

20

21

22

23

24

ACO. we care for water

Every ACO product supports the ACO WaterCycle

- ACO Access Covers UNIFACE
- ACO Access Covers PAVING
- ACO Access Covers SOLID

95794 ACO Access Covers Assist Manual/EN/Q1/25

ACO Industries k.s.

Havlickova 260
582 22 Pribyslav
Czech Republic

www.aco-accesscovers.com